Applicant: CHAITANYA BHARATHI INSTITUTE OF TECHNOLOGY

Total Sheets: 13

Application No. : **Sheet No. 1**

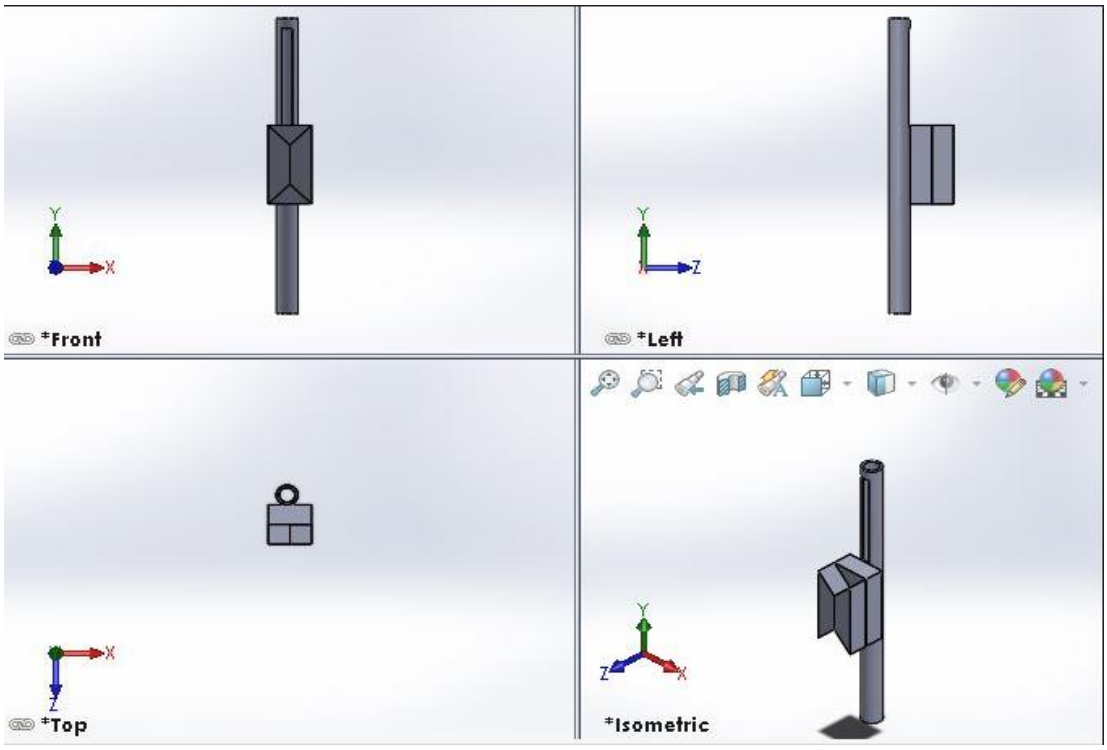

Figure 1a

Afzal Hasan
IN/PA-1328
of HASAN AND SINGH

Applicant: CHAITANYA BHARATHI INSTITUTE OF TECHNOLOGY

Total Sheets: 13

Application No. : **Sheet No. 2**

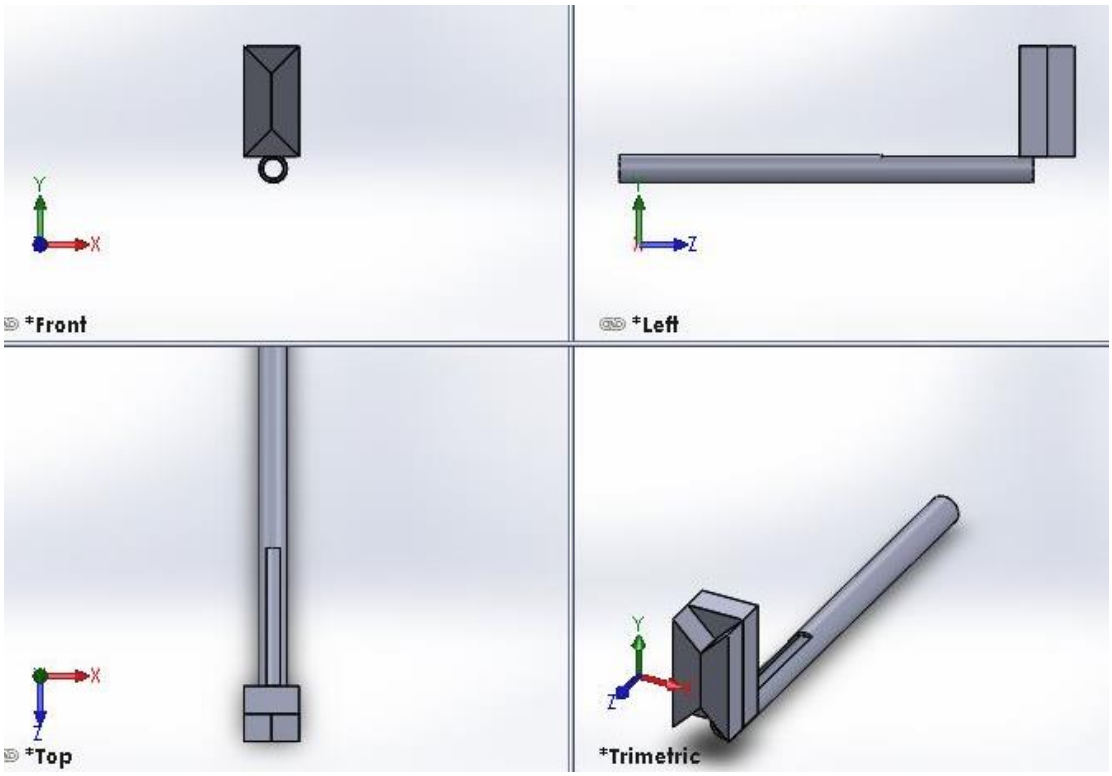

Figure 1b

Afzal Hasan
IN/PA-1328
of HASAN AND SINGH

Applicant: CHAITANYA BHARATHI INSTITUTE OF TECHNOLOGY

Total Sheets: 13

Application No. : **Sheet No. 3**

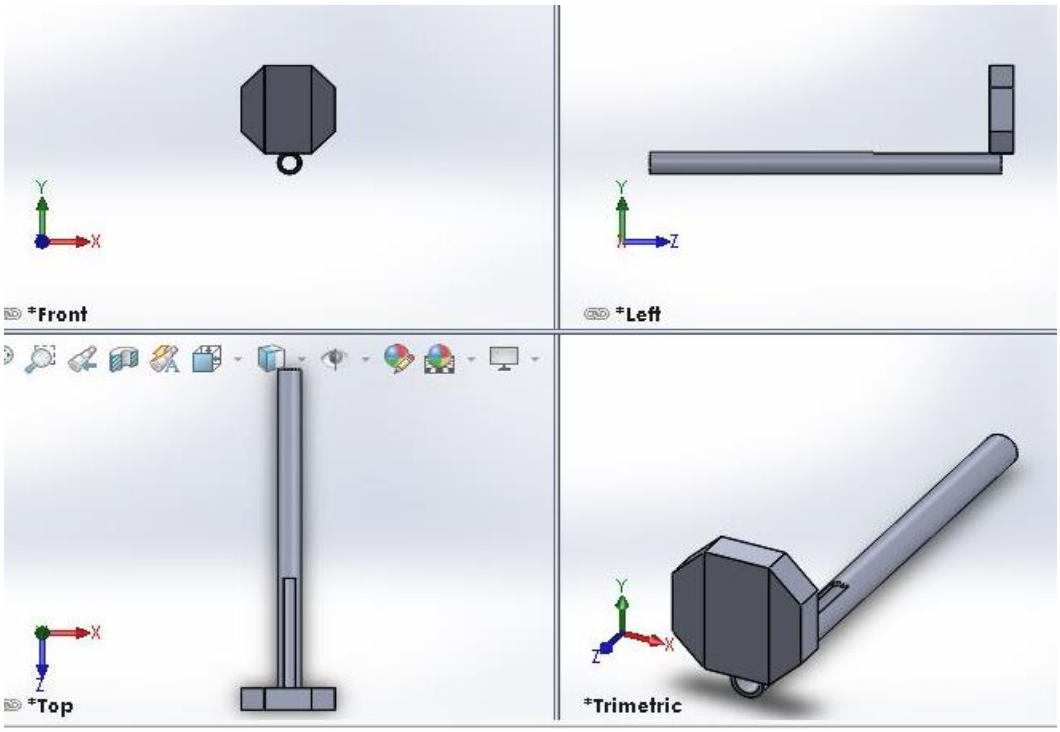

Figure 1c

Afzal Hasan
IN/PA-1328
of HASAN AND SINGH

Applicant: CHAITANYA BHARATHI INSTITUTE OF TECHNOLOGY

Total Sheets: 13

Application No. : **Sheet No. 4**

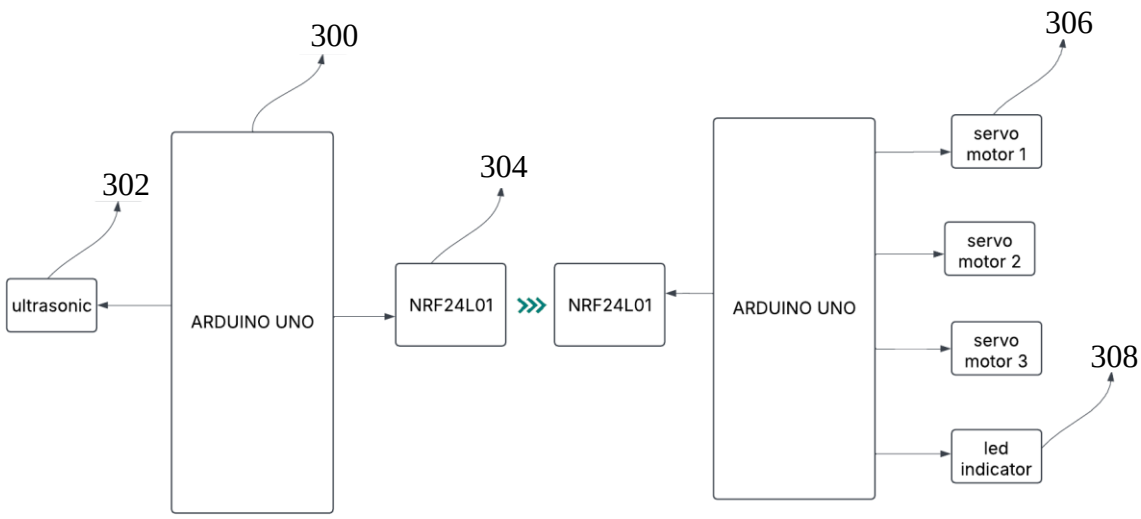

Figure 2a

Afzal Hasan
IN/PA-1328
of HASAN AND SINGH

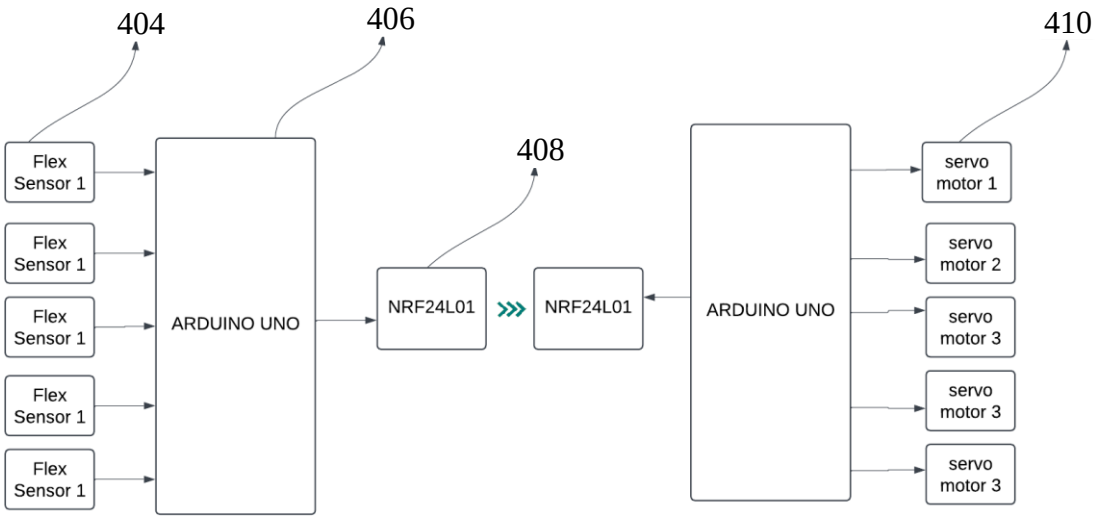

Figure 2b

Afzal Hasan
IN/PA-1328
of HASAN AND SINGH

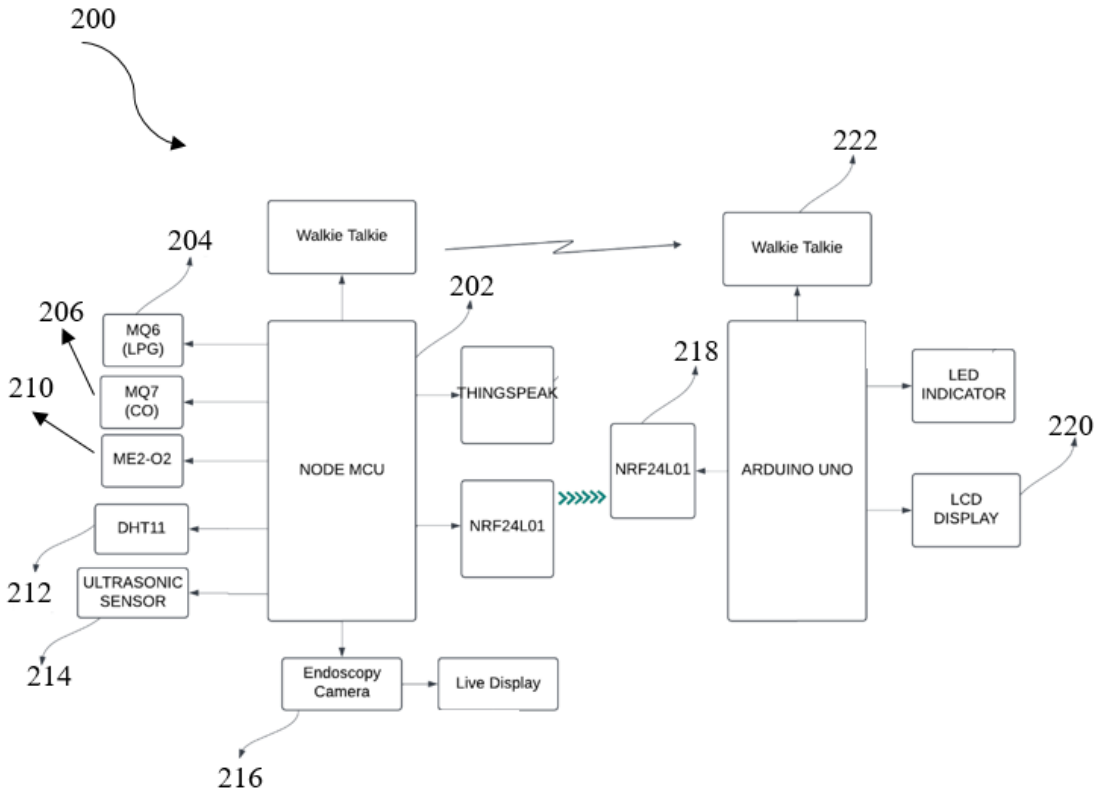

Figure 2c

Afzal Hasan
IN/PA-1328
of HASAN AND SINGH

Applicant: CHAITANYA BHARATHI INSTITUTE OF TECHNOLOGY

Total Sheets: 13

Application No. : **Sheet No. 7**

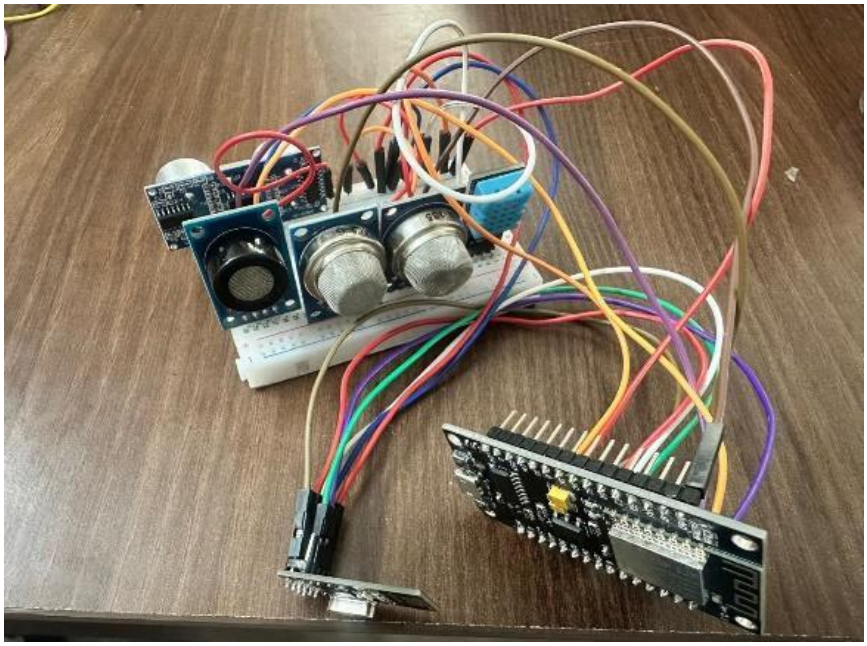

Figure 3

Afzal Hasan
IN/PA-1328
of HASAN AND SINGH

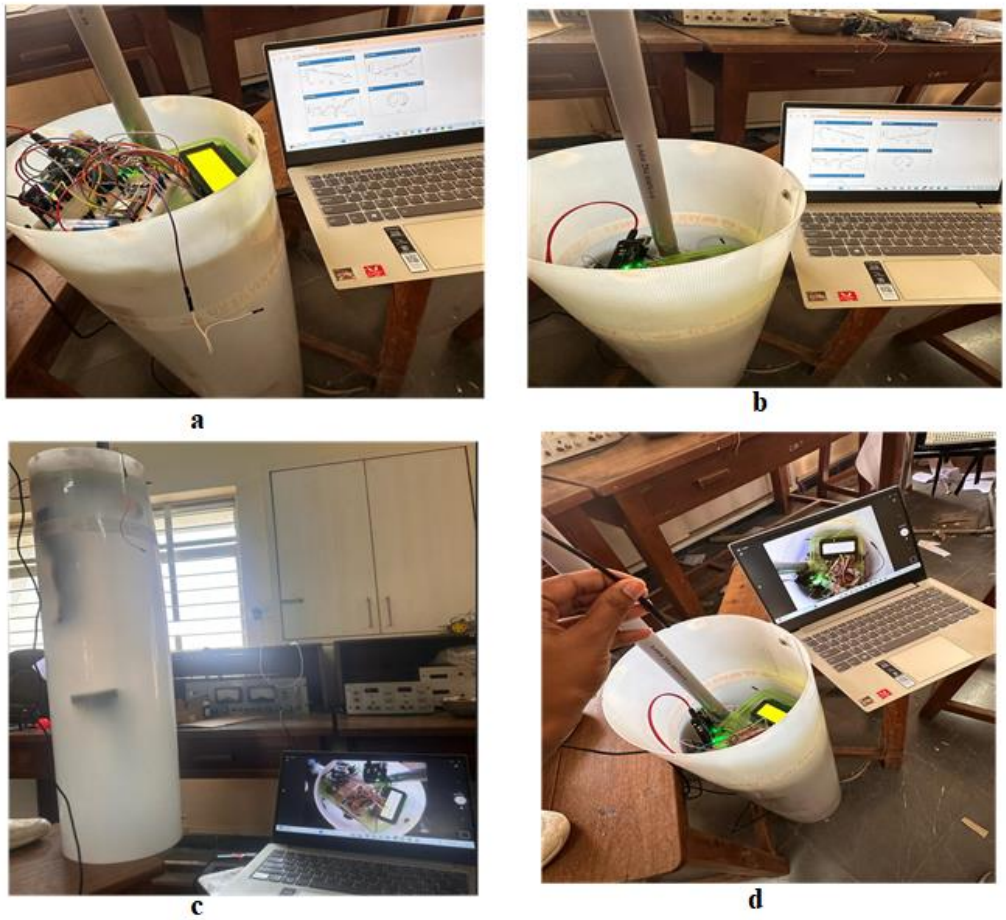

Figure 4

Afzal Hasan
IN/PA-1328
of HASAN AND SINGH

Applicant: CHAITANYA BHARATHI INSTITUTE OF TECHNOLOGY

Total Sheets: 13

Application No. : **Sheet No. 9**

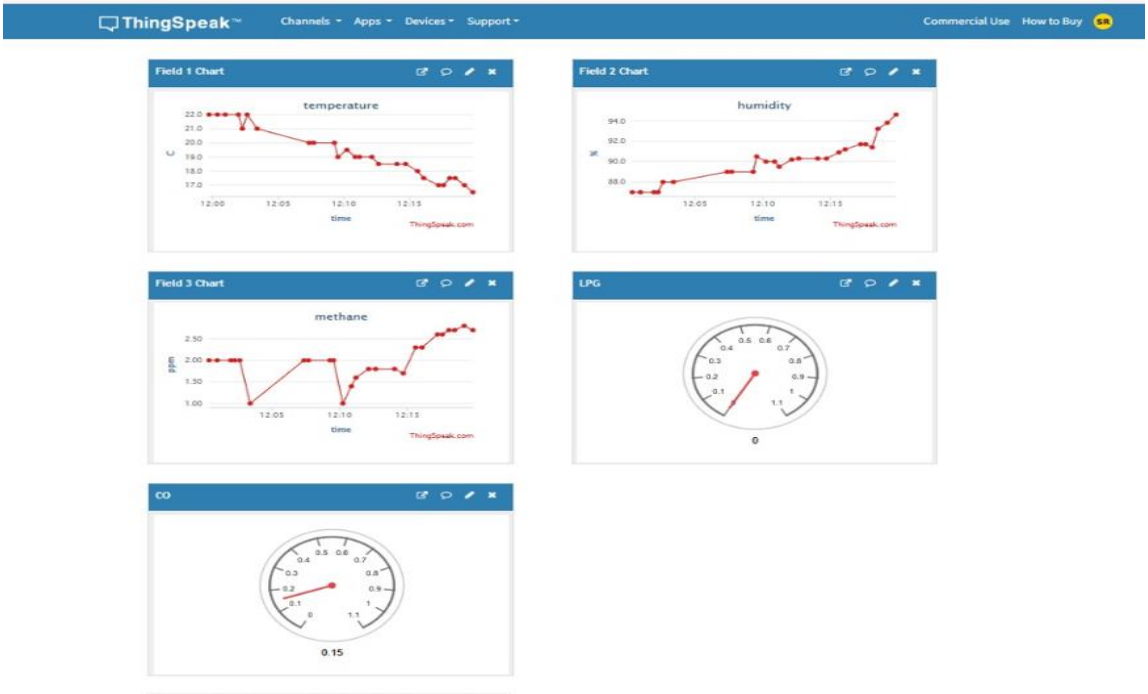

Figure 5

Afzal Hasan
IN/PA-1328
of HASAN AND SINGH

Figure 6

Afzal Hasan
IN/PA-1328
of HASAN AND SINGH

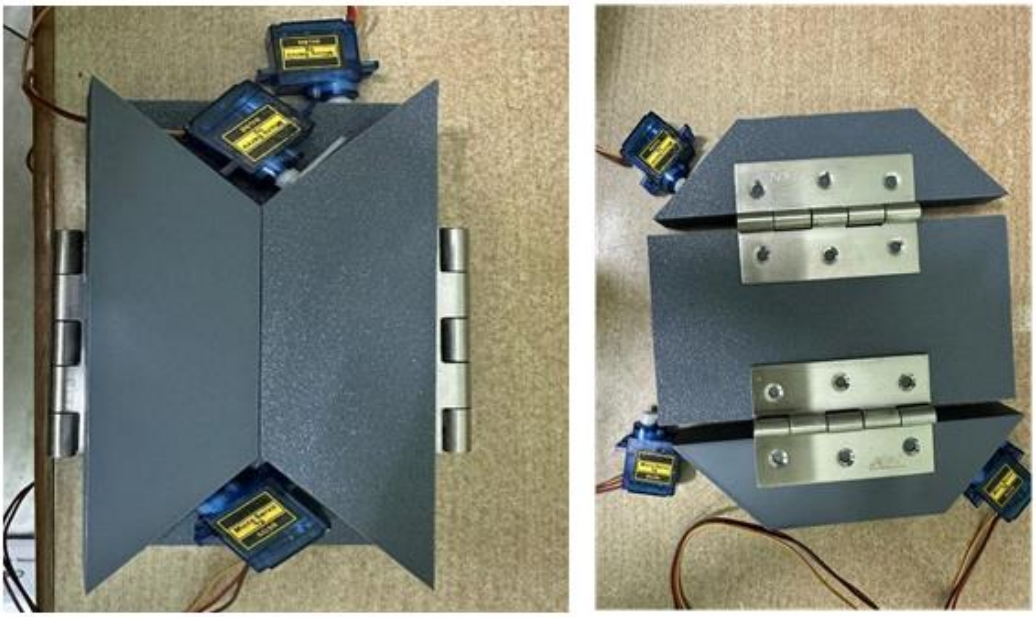

Figure 7

Afzal Hasan
IN/PA-1328
of HASAN AND SINGH

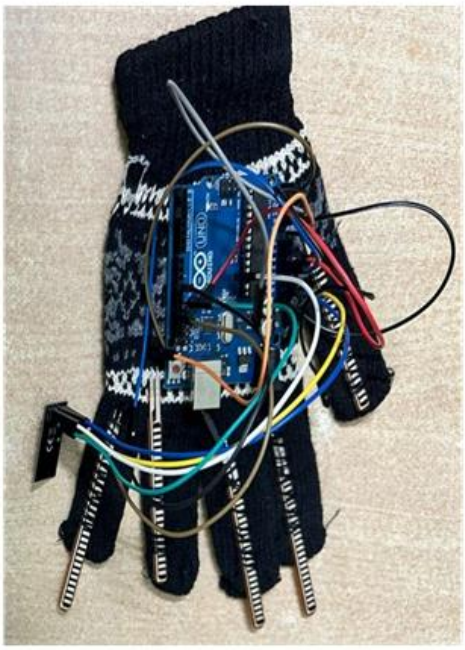

Figure 8

Afzal Hasan
IN/PA-1328
of HASAN AND SINGH

Applicant: CHAITANYA BHARATHI INSTITUTE OF TECHNOLOGY

Total Sheets: 13

Application No. : **Sheet No. 13**

Figure 9

Afzal Hasan
IN/PA-1328
of HASAN AND SINGH